Answers to the Chapter 1 Exercises

1-01. *Identify three reasons why we use automatic controls in HVAC systems.*

To reduce labor costs; to provide more consistent, and often improved, performance; and to control or override equipment for safety purposes.

1-02 *What is the fundamental difference between an open loop and a closed loop?*

A closed loop has measurement feedback from the controlled variable. An open loop measures a variable that is not affected by the operation of the system; it has no direct feedback from the variable it is directly controlling.

1-03 *Is the cruise control in your car reverse-acting or direct-acting?*

The controlled variable is speed. The accelerator's normal position is off; no fuel to the engine. When the speed goes down, we want to send more fuel to the engine, so the accelerator "signal" must increase. Therefore, the controller is reverse-acting.

1-04 *A controller is used to control a fan system to maintain a given static pressure in the supply ductwork. The fan capacity is controlled using a discharge damper. Static pressure is measured using a static pressure sensor. For this system, see Figure 1-18 and identify the following: the controlled device; the controlled variable; and the sensor.*

The controlled device is the discharge damper; the controlled variable is duct static pressure; and the sensor is the static pressure sensor.

. *Of the three control modes, which would not be appropriate for this application?*

Two-position control. This could result in excessively high pressures when the damper was full-open and would force the fan into surge when the damper was full-closed.

. *If the discharge dampers are normally-closed, should the controller be direct acting or reverse acting?*

As the pressure falls, we want the damper to open. Because the damper is normally closed, this requires an increase in the damper signal. Therefore, the controller must be reverse acting.

1-05 *Suppose the supply fan in the previous question served a very large high-rise building with many zones. When all areas of the building are being served, the effect of small change in the position of the discharge damper causes a relatively small change in the duct static pressure. Suppose most floors of the building were then dampered off so that the fan was now serving only 25% of the area. If the control had been tuned to provide good control when all floors were being served, how would you characterize the control loop when most floors are shut off: sluggish or too responsive (possibly unstable)? Why?*

Too responsive. As noted, when all areas of the building are being served, the effect of small change in the position of the discharge damper causes a relatively small change in the duct static pressure. When only a small area of the building is served, the fan will be effectively oversized. The damper will have to stay near closed to keep the pressure under control and small changes in the position of the damper will cause large changes in duct static pressure. Hence, the loop will be too responsive, too quick, and may be unstable.

1-06 *What does applying integral action to a proportional control loop accomplish?*

It reduces or eliminates droop (offset).

1-07 *Identify two reasons why derivative logic is seldom used for HVAC system control.*

1) HVAC control processes are generally slow moving, so derivative logic does not improve control. 2) Having derivative logic complicates the loop tuning process.

1-08 *A reverse-acting pneumatic controller with an output that ranges from 3 to 13 psi must sequence a heating and cooling control valve. Which of the following selections will work: a) a normally-closed heating valve with a control range from 8 to 13 psi and a normally-open cooling valve with a 5 to 10 psi control range; b) a normally-open heating valve with a control range from 3 to 8 psi and a normally-closed cooling valve with a 8 to 13 psi control range; c) a normally-closed heating valve with a control range from 8 to 13 psi and a normally-open cooling valve with a 3 to 8 psi control range.*

Answer c is correct. Answer a is incorrect because the control ranges overlap. Answer b is incorrect because the normal positions are incorrect

Answers to the Chapter 2 Exercises

2-01. *If the resistor in Figure 2-1 is 100 ohms and the battery is 10 Vdc, what is the current when the switch is closed?*

I = V/R = 10/100 = 0.1 amps.

2-02. *Th figure below shows two identical relays in series (line 1)? If the relays each require 20V minimum to pull in their contact, when the switch is closed, will the pilot light (line 2) go on? Why or why not?*

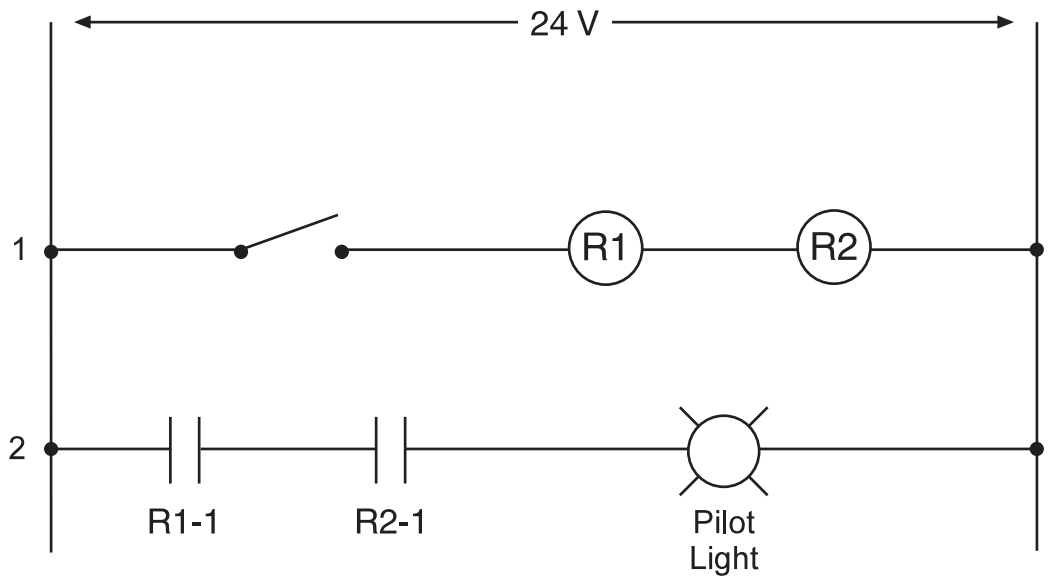

The voltage across each has to add to 24V. Because each is the same, they each have the same resistance, so each would each have 12V across it. Because this is not adequate to activate the solenoid and close the contact, the relays will not work and the light will not go on. As this example indicates, most loads cannot be wired in series and still operate properly.

*

2-03. *A motor draws 12 amps at 208V, three-phase. It uses 3,500 watts (3.5 kW). What is the power factor?*

$P = V \times I \times PF \times 1.73$ (1.73 is the square root of 3.) Solving for PF and substituting, we get PF = 0.81 or 81%.

2-04. *Explain why inductance does not affect the current in a dc circuit that has been running a long time.*

Induced electrical potential only occurs when the magnetic field is changing. The magnetic field is proportional to the current flow. Therefore, once the current is constant, the inductive effect is gone.

2-05. *Why is ac used to distribute electricity rather than dc?*

Alternating current (ac) can easily be transformed to higher and lower voltages, allowing distribution to be done at high voltage, resulting in lower line losses and allowing use of smaller wiring and cables.

2-06. *How can using 24V for control power reduce installation costs?*

Most codes do not require 24V wiring to be enclosed in conduit, so wiring costs are reduced.

2-07. *How many contacts does a double-pole single-throw relay have?*

Two.

2-08. *Why does use of a variable speed drive obviate the need for a motor starter?*

The VSD provides both start/stop and overload protection, the essential functions of the starter.

2-09. *Draw a ladder diagram for the Boolean sequence: If A or B or (NOT C and NOT D) then turn on the pilot light.*

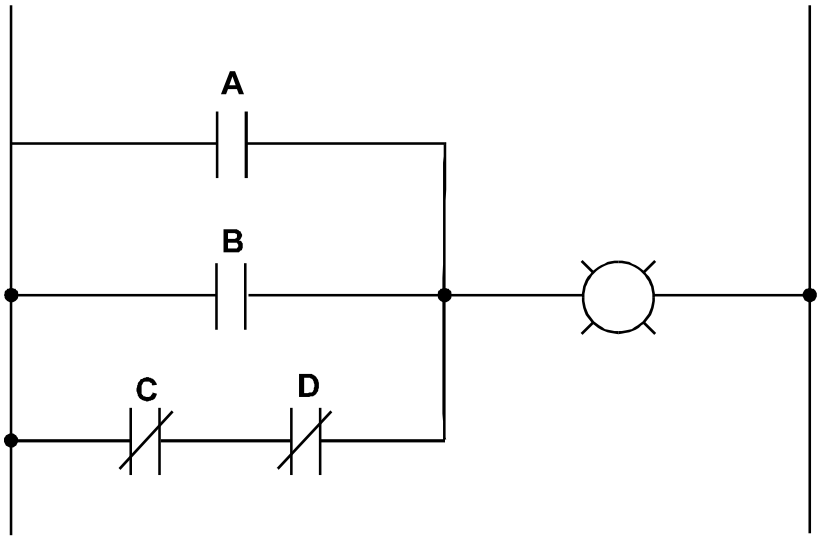

2-10. *Extra Credit: Draw a ladder diagram for a three-phase supply fan with inlet damper ventilating an equipment room to accomplish the following control sequence: The fan may be started and stopped manually or automatically using a hand-off-auto switch. In the auto position, the fan shall start and stop using a two-position space thermostat (set to 85°F). The inlet damper (powered by a 120V two position actuator) shall be powered opened and allowed to open sufficiently, as indicated by a limit switch on the damper before starting the fan.*

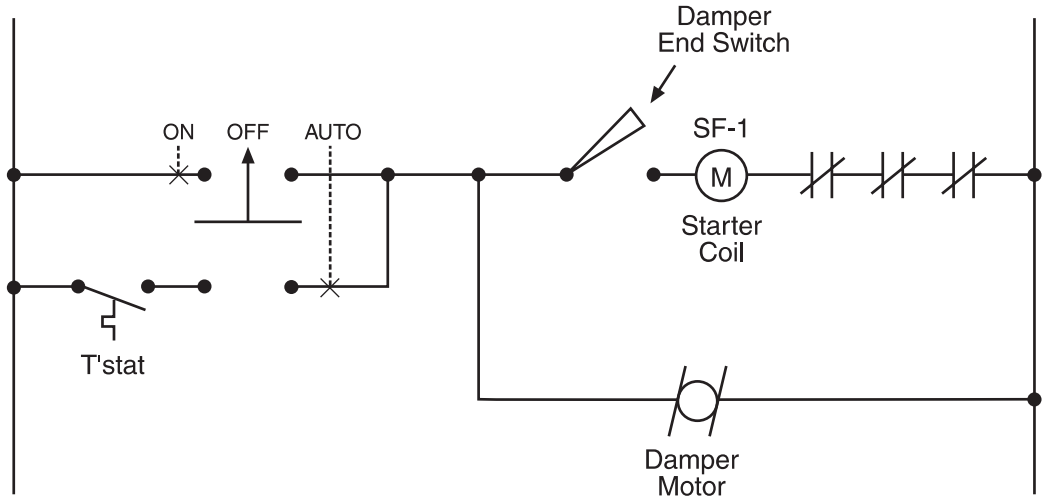

Answers to the Chapter 3 Exercises

3-01. *What occurs when a control valve is installed backwards?*

Short answer: water hammer. Long answer: If flow takes place in the wrong direction, the velocity pressure tends to close the valve (pushing down on top of the plug). When the valve throttles are near closed, the pressure may be enough to push the plug to closed position, taking advantage of the free movement or slack in the valve stem. When this happens, flow ceases, but then the velocity pressure component disappears and free movement allows the valve to crack open. Flow begins, the velocity component reappears and the cycle is repeated indefinitely. Each time the flow stops and starts, the inertial force of the fluid in the pipe causes a shock, which is known as water hammer.

3-02. *Why is a three-way mixing valve used rather than a three-way diverting valve to control flow through a cooling or heating coil?*

Mixing valves are less expensive

3-03. *Three-way valves are used in so-called constant flow systems. Why is the flow in these systems not really constant?*

The pressure drop through the coil and bypass will vary as the square of the flow rate. As the flow is divided between the two paths, the pressure through both paths will drop, causing an increase in flow.

3-04. *Name three advantages of using two-way valves instead of three-way valves.*

They are less expensive; they reduce pump energy; they reduce piping heat losses when a central plant serves many coils operating on different operating schedules; diversity in load may be taken into account when sizing the pumping and distribution systems, potentially reducing their costs; and the system is self-balancing in most applications.

3-05. *Which blade type is commonly used for high velocity applications: the triple V-groove blade or the air-foil blade? Why?*

The air foil blade is usually more appropriate for high velocity applications because it will have much lower pressure drop and will generate less noise due to turbulence.

3-06. *What are the two types of plugs used for modulating control valves? Which is recommended for use on two-way valve, variable flow applications? Why?*

The two types are linear and equal-percentage plugs. Equal percentage plugs are recommended for two-way valve duty because their operating characteristic tends to counter the natural increase in valve differential pressure typical of variable flow systems.

3-07. *What is the difference between a control valve's close-off pressure rating and its dynamic close-off pressure rating?*

The close-off rating is the maximum differential pressure across the valve that the valve and actuator can completely close against. The dynamic close-off pressure rating is the maximum differential pressure for modulating (as opposed to two-position) applications. Above this pressure, control through the entire stroke will no longer be smooth and the design turn-down ratio will not be achieved.

3-08. *If a valve with a higher C_v is replaced by a valve with a lower C_v, will the circuit pressure drop increase or decrease?*

Increase. The higher the C_v, the lower the pressure drop and vice versa.

3-09. *Which damper type, opposed blade or parallel blade, should be used for a fan discharge damper in a VAV application? Give two reasons why.*

Opposed blade, because the resulting flow versus stroke characteristic is more linear and turbulence downstream is minimized.

3-10. Which damper type, opposed blade or parallel blade, should be used for most economizer mixing box applications? Give two reasons why.

Parallel blade, because they result in a nearly constant pressure drop across the assembly and because the blades may be oriented to improve mixing.

3-11. *Why is an economizer mixing damper assembly not analogous to a three-way mixing valve controlling flow through a coil?*

With three-way valves, the desired result is a modulating flow through the coil, just as it is with a two-way valve (the controlled flow is one entering the valve, not the flow leaving the common port). With an economizer mixing assembly, the desired result is to mix two air streams together (the controlled fluid is that leaving the assembly). The outlet flow rate is constant, not modulating.

Answers to the Chapter 4 Exercises

4-01. *What is the primary advantage of an RTD over a thermistor? What recent trends may change this?*

The RTD relies on the inherent properties of the sensing element (such as platinum), so it does not normally require regular calibration. Thermistors require regular calibration, but the frequency is becoming less and less as technology improves. Many designers now feel thermistors have become as reliable as RTDs. (Improved accuracy is often mentioned as an advantage of RTDs, but commercial-grade RTDs are no more accurate than commercial-grade thermistors and are often less accurate.)

4-02. *How is humidity typically measured in HVAC applications: by its relative humidity, dewpoint temperature or wetbulb temperature?*

By far, the most common humidity measurement is the relative humidity.

4-03. *An air flow sensor in an outdoor air intake is required to measure velocities in the range 250 fpm to 2,000 fpm. What type of sensor would be most appropriate: a pitot sensor or a thermal anemometer? Why?*

A thermal anemometer would be the best choice. It is capable of measuring both the low velocity and the overall range of velocities at reasonable accuracy.

4-04. *Air flow rate from a variable air volume supply and return fan must be measured. Where is the best place to locate the sensors, from a space and installation cost perspective?*

Pitot sensors or thermal anemometers located in the fan inlet bell. This is the best location because it requires no additional space for straight ductwork, as duct mounted arrays do, and velocities are high so accuracy is increased.

4-05. *A pitot tube inserted in an air duct indicates a total pressure of 3.5 in. and a static pressure of 3.0 in. What is the velocity in the duct?*

The velocity pressure is 3.5 in. – 3.0 in., or 0.5 in. Using *Equation 4-2*, this equates to 2,830 fpm.

4-06. *Status is required to indicate positively whether a pump is operating so that the chiller it directly serves can be prevented from operating with no flow. Which would be the better device to use: a differential pressure switch sensing pressure across the pump; or a current relay sensing current to the pump motor?*

The current switch would be less expensive to install and more reliable. It would also be able to distinguish between a no-flow condition caused by a closed valve because current setpoint could be set above that corresponding to shut-off operation (pumps inherently unload as flow is shut off). The differential pressure switch would give a false flow indication under these conditions. (Other solutions would be the standard paddle flow switch, the traditional design, or a ΔP sensor mounted across the chiller set to the pressure drop chiller corresponding to minimum chiller flow, a more accurate but more expensive approach.)

4-07. *A duct smoke detector is mounted directly downstream of a filter section in a variable air volume system. The filter section was designed for 500 fpm maximum. What operational problem might this design have?*

This is a variable air volume system, which means that the air flow velocity will peak at 500 fpm but can go much lower. At low loads, the velocity across the filter section will probably fall below the minimum required for the duct detector to operate. The detector should be relocated to a duct having a higher velocity.

Answers to the Chapter 5 Exercises

5-01. *List seven guidelines that should be followed when designing a control system.*

- The control system must meet the needs of the process.
- The control system should control the process as directly as possible.
- The control system must be designed to work with the HVAC system, and vice versa.
- The HVAC control system should minimize energy consumption while meeting process goals.
- The cost of the HVAC control system must meet the budget.
- The control system must be designed for maximum simplicity.
- The control system must be easy to understand and maintain.

5-02. *When is it a good idea to take the responsibility for control system installation away from the mechanical contractor and bid the controls separately under Division 17 (using CSI format)?*

When the control system scope goes beyond HVAC control alone, such as when the system includes security, life-safety or lighting control.

5-03. *Name two benefits of pressure-independent VAV box controls over pressure-dependent control in addition to their ability to compensate for duct pressure fluctuations.*

Both minimum and maximum flow rates can be controlled regardless of duct pressure. With pressure dependent controls, flow rates are a function of available duct pressure.

5-04. *One of the key guidelines to creating a clear sequence of controls is (pick one): a) Break the system into subsystems; b) Break the subsystems into logical blocks, one per controlled variable and/or one per controlled device; c) State what setpoints should be or how they are to be obtained in the field; d) State how a controlled device is to be controlled both during normal operation and when the system is off; e) All of the above.*

E. All of the above.

5-05. *Supply air temperature is to be reset according to the following reset schedule:*

Outdoor Air Temperature	*Supply Air Temperature*
0°F	*95°F*
70°F	*75°F*

What is the supply air setpoint when the outdoor air temperature is 10°F below zero? What is the setpoint when the outdoor air temperature is 35°F?

Below 0°F, the supply temperature setpoint remains at 95°F. (Above 70°F outdoor air temperature, the supply air temperature setpoint remains at 75°F.) At 35°F outdoor air temperature, the setpoint is halfway between 95°F and 75°F, or 85°F, because 35°F is halfway between 0°F and 70°F.

5-06. *The inlet guide vanes in Figure 5-4 are normally-closed so that the fan starts at minimum volume. What control action (direct or reverse) must the static pressure controller have?*

Reverse-acting. As the pressure in the duct increases, we want the inlet vanes to close. Because they are normally-closed, this requires that the signal decrease as the pressure increases.